SANITARY CLAMPS 13-MH SERIES



13-MHM

Features & Specifications

- Constructed of 304 stainless steel
- High quality product ensured with 100% factory inspection
- Various wing nut styles available

13-MHM Size	A
½"	1.13
¾"	1.13
1"	2.12
1½"	2.12
2"	2.65
2½"	3.19
3"	3.72
4"	4.82
6"	6.71
8"	8.70
10"	10.71

* Single Pin

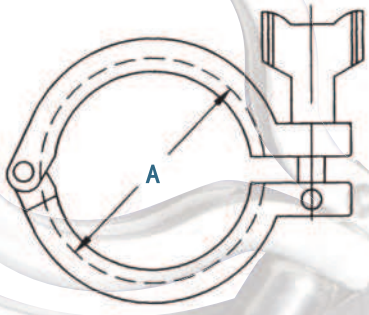

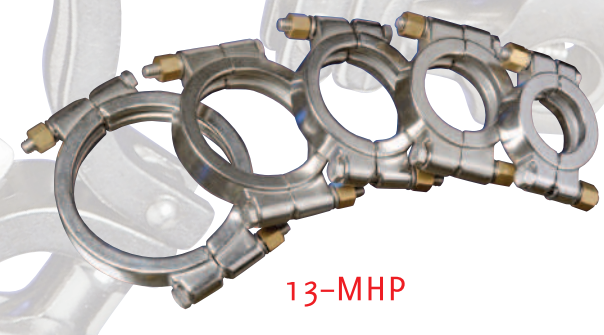

13-MHP



13-MHHS

13-MHP Size	A
1"	2.05
1½"	2.05
2"	2.58
2½"	3.11
3"	3.64
4"	4.74
6"	6.71

* High Pressure

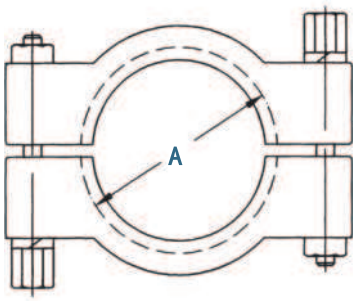

13-MHHS Size	A
½"	1.13
¾"	1.13
1½"	2.12
2"	2.65
2½"	3.19
3"	3.72
4"	4.82
6"	6.71
8"	8.70

*3-Segment

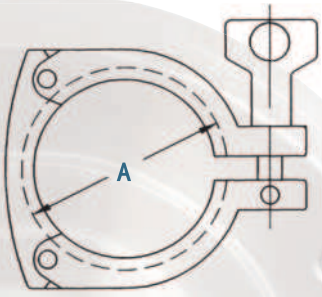

13-MHHM Size	A
1"	2.12
1½"	2.12
2"	2.65
2½"	3.19
3"	3.72
4"	4.82

* Double Pin

